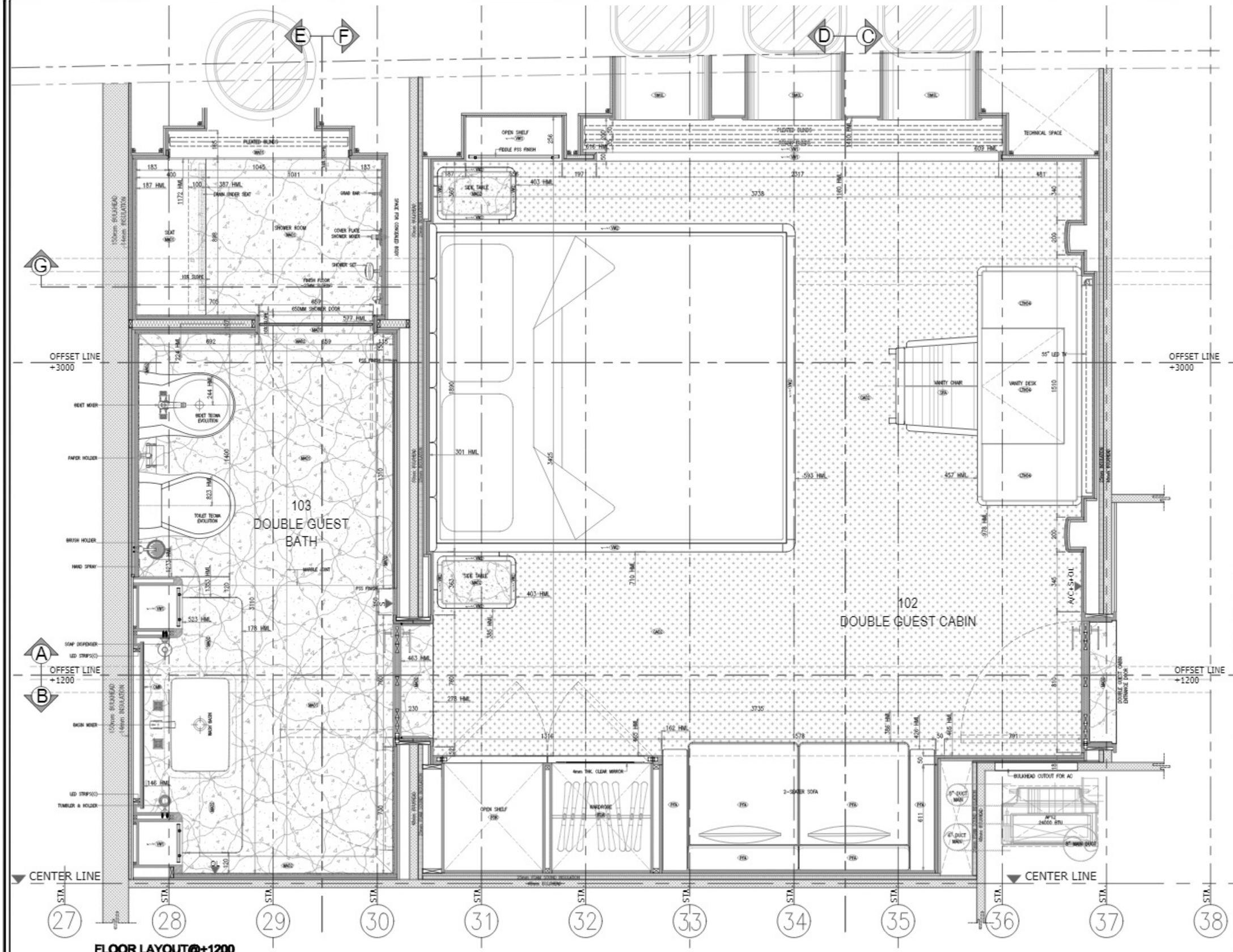


Gulf Craft Inc

MAJESTY YACHTS

MAJESTY 135-01

102-103 DOUBLE GUEST CABIN & BATH FLOOR LAYOUT

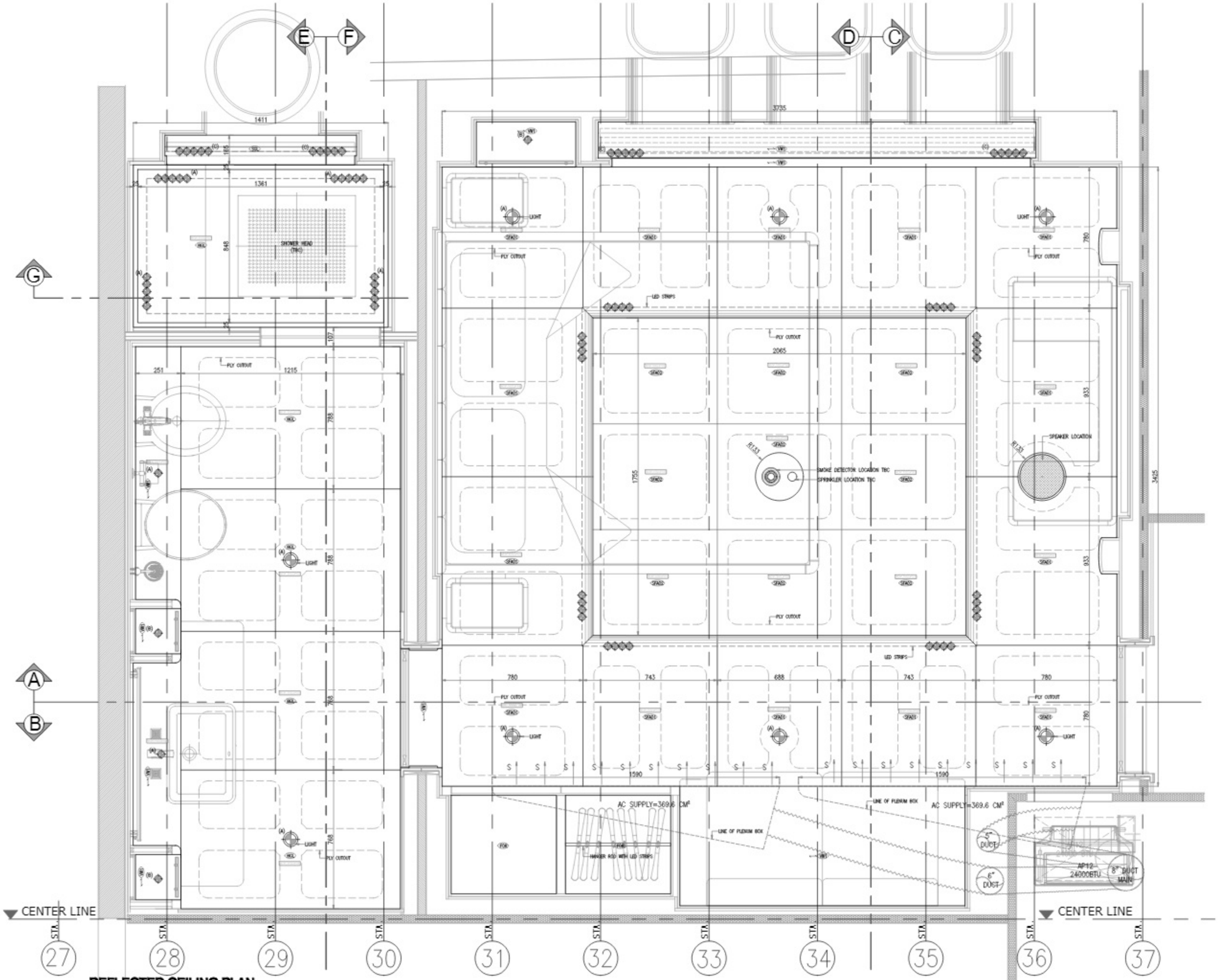


**REFLECTED CEILING PLAN**

SCALE: 1:10

Golf Craft Inc

MAJESTY YACHTS

MAJESTY 155-01

103-103 DOUBLE QUEST CABIN & BATH CEILING & MATRIX LAYOUT

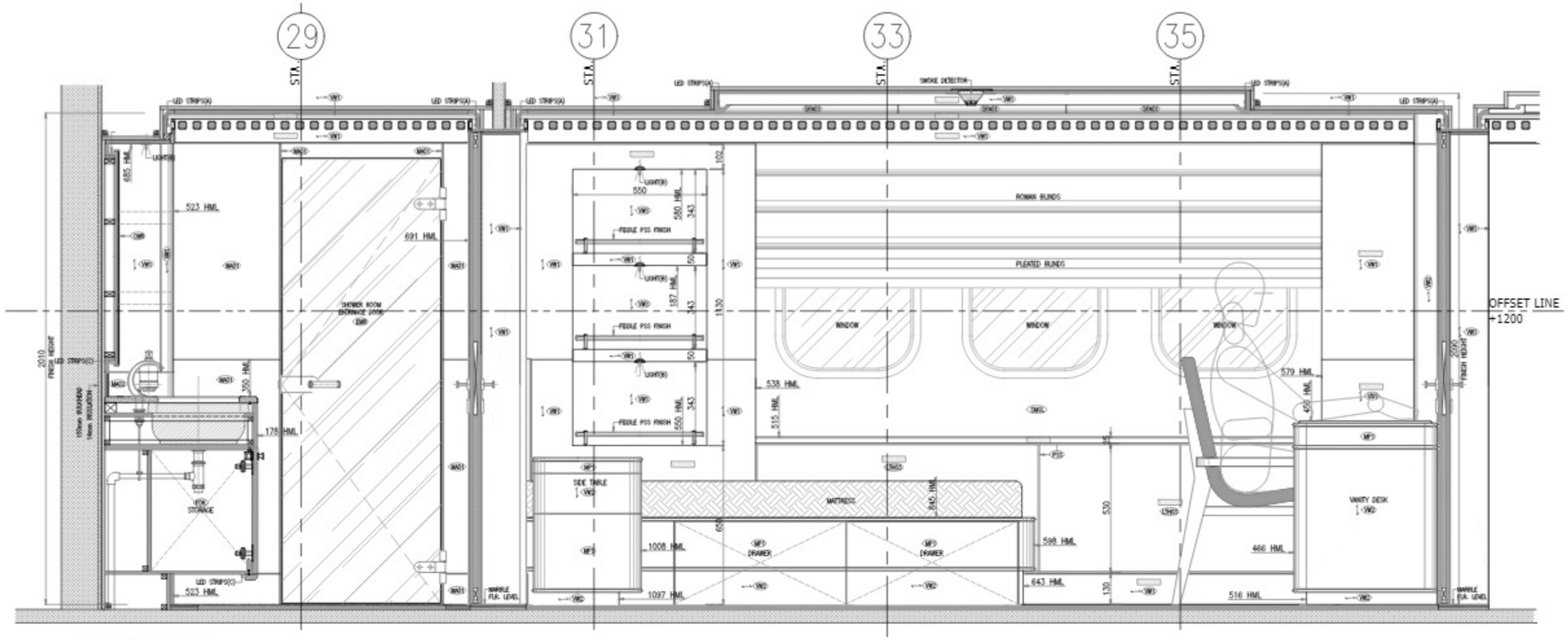


ELEVATION@A

SCALE: 1:10

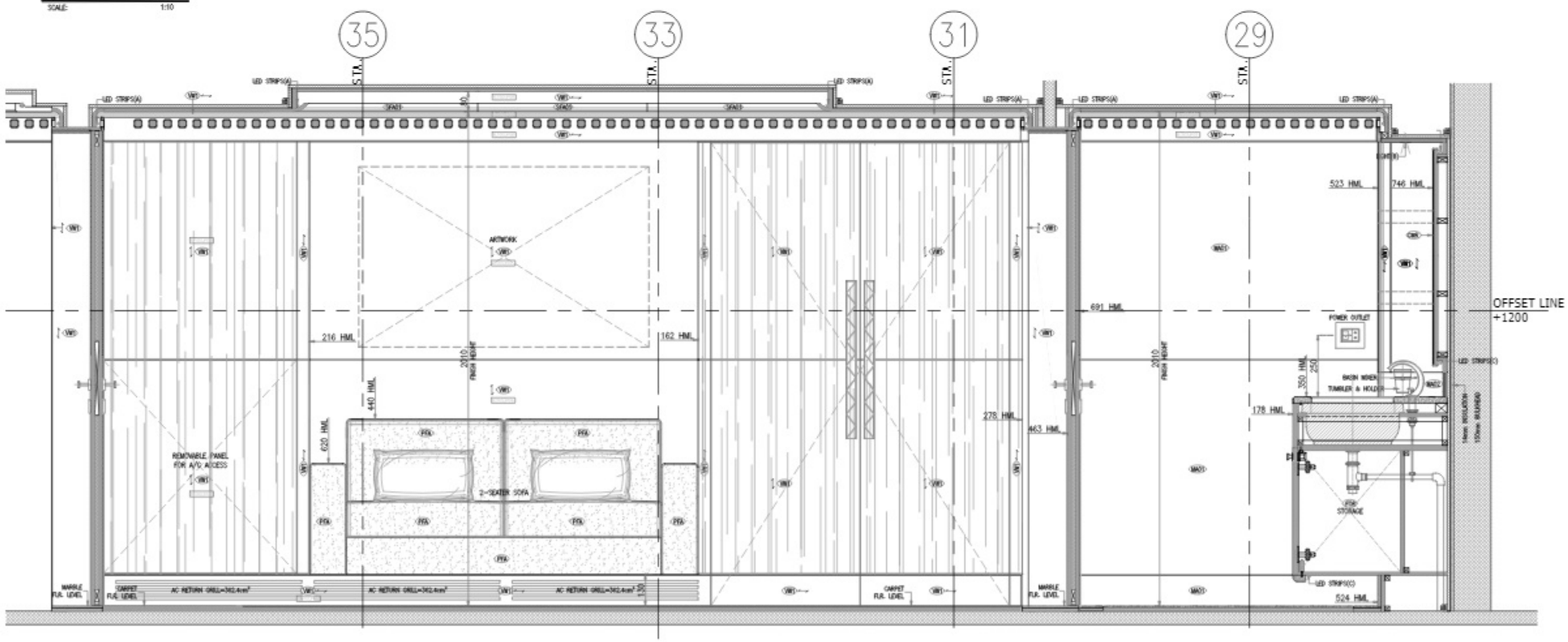


ELEVATION@B

SCALE: 1:10

Golf Craft Inc.

MAJESTY YACHTS

MAJESTY 155-01

105-105 DOUBLE GUEST BASIN & BATH ELEVATION 01

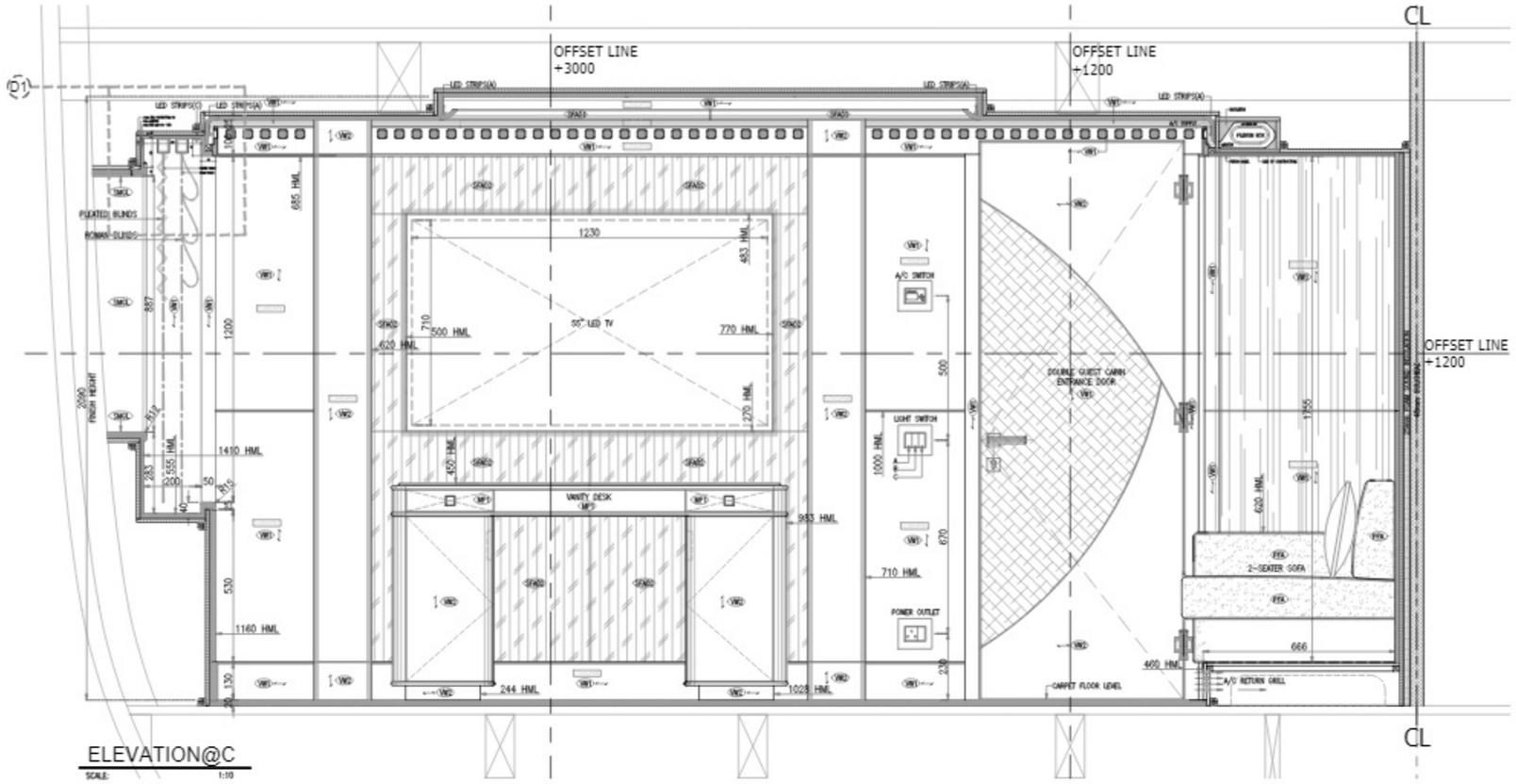


ELEVATION@C

SCALE: 1:10

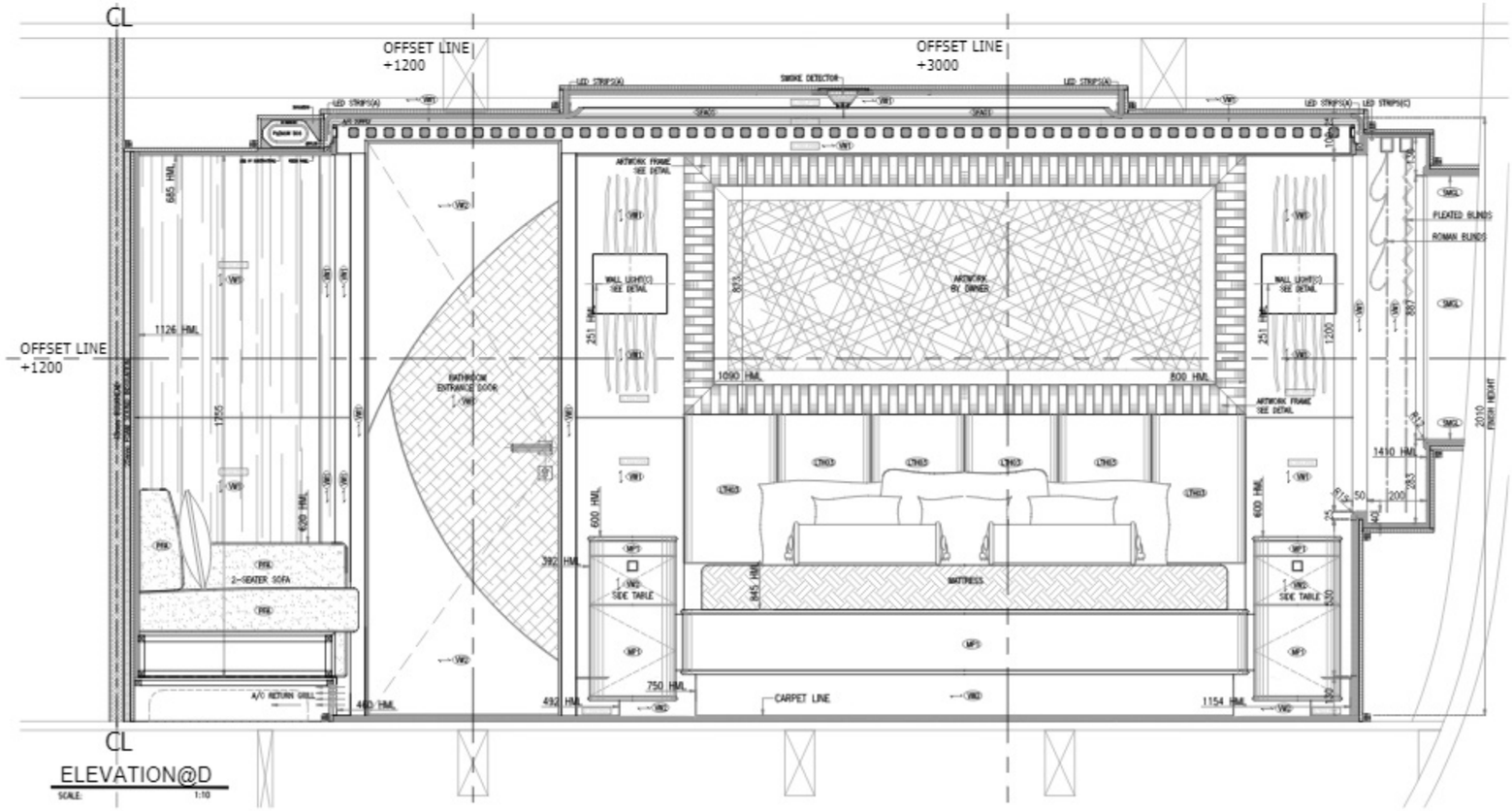


ELEVATION@D

SCALE: 1:10

Golf Craft Inc

MAJESTY YACHTS

MAJESTY 155-01

102-103 DOUBLE GUEST CABIN & BATH ELEVATION 02

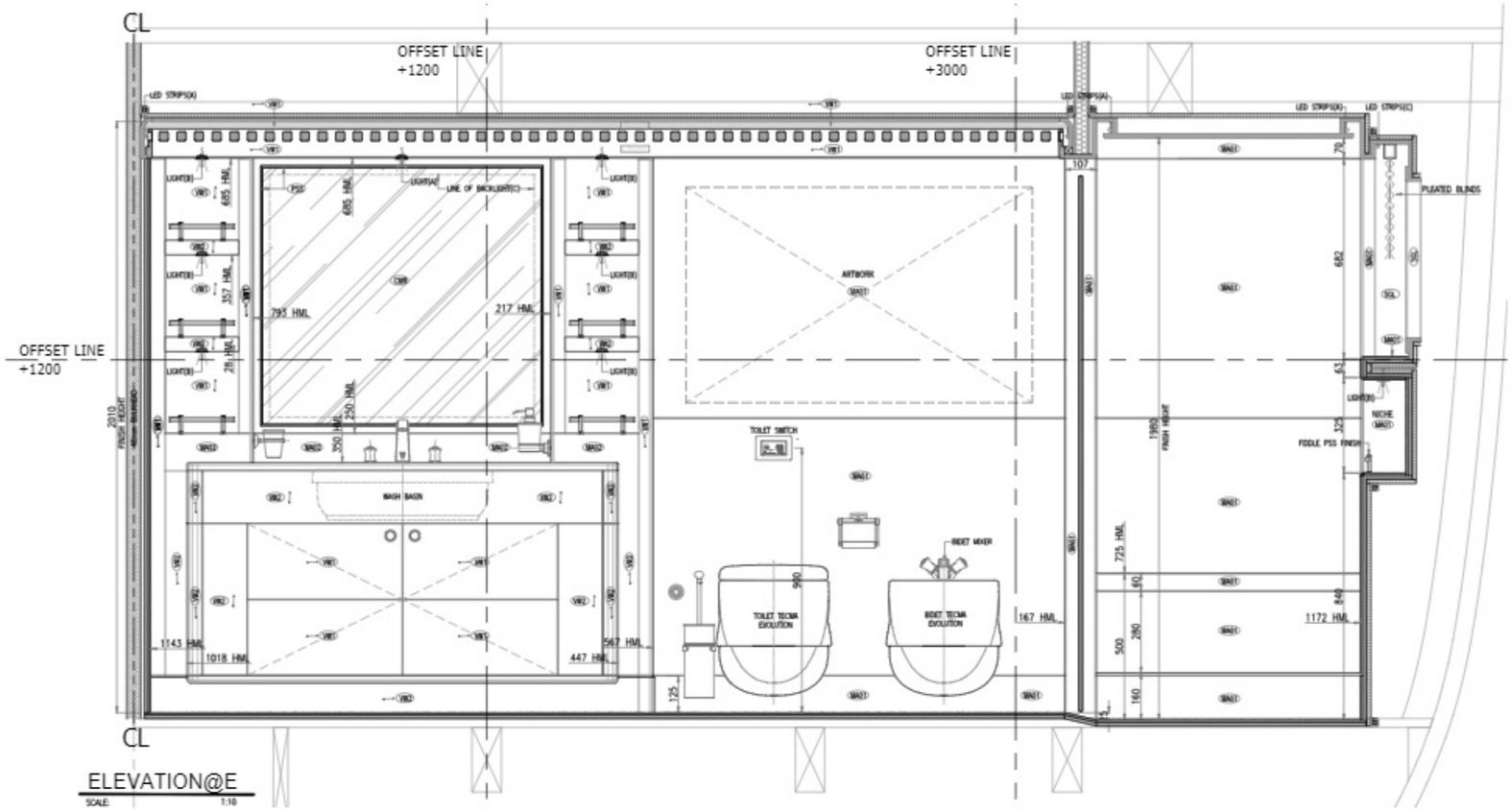


ELEVATION@E

SCALE: 1:10

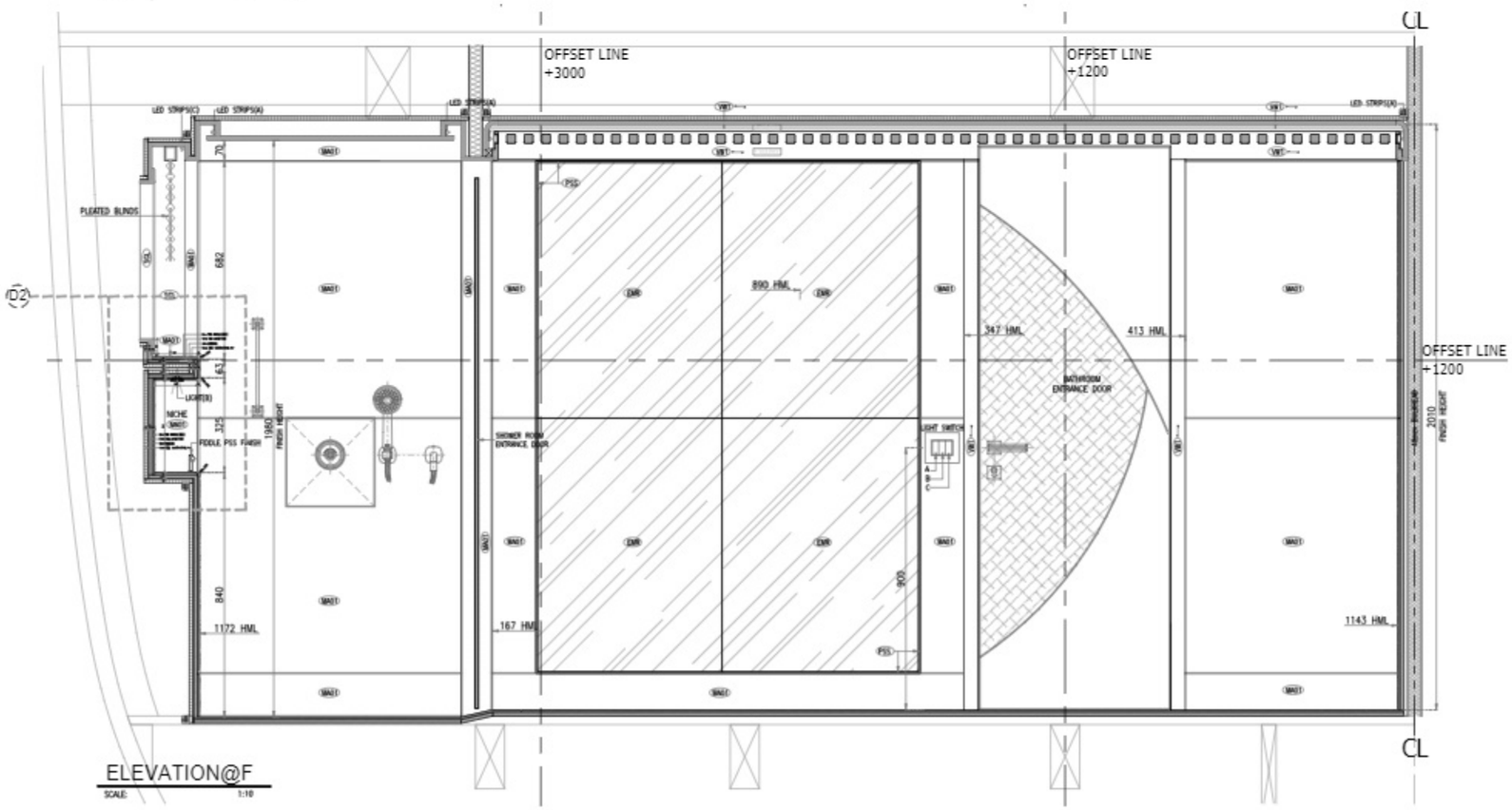


ELEVATION@F

SCALE: 1:10

Golf Craft Inc

MAJESTY YACHTS

MAJESTY 155-01

102-103 DOUBLE BIDET
BASIN & BATH
ELEVATION 02

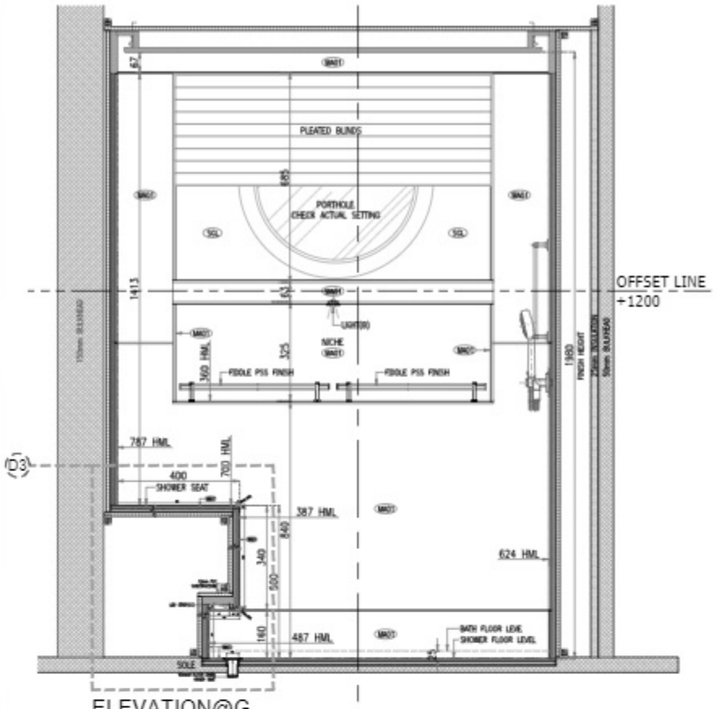


ELEVATION@G

SCALE: 1:10

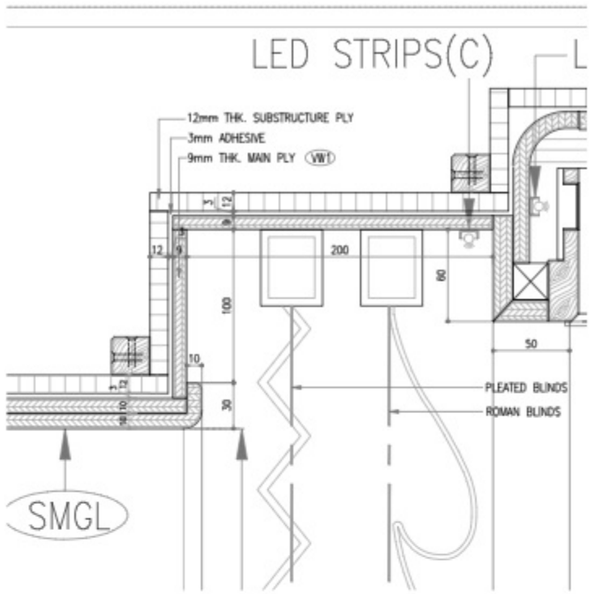


D1-SPOT DETAIL

SCALE: 1:2

| LEGEND: | DESCRIPTION | ITEM CODE | BRAND–MODEL | UOA | QTY. |
|---|---|---|---|---|---|
| | DOOR HANDLES CHROME POLISHED | A3:113:H370 | FUSITAL– H 370 SERIE | SET | |
| | MAIN DOOR HINGE<br>WARDROBE HINGE | | | PCS. | |
| | SHOWER DOOR HANDLE | | | SET | |
| | SHOWER DOOR HINGE | | | PCS. | |
| | CABINET HINGE | | | | |
| | PUSH LATCH | | | SET | |
| | – | | | | |
| | WARDROBE RAIL/<br>HANGER ROD WITH LIGHT | SPECIFIC HARDWARE | OVA 30x15 STAINLESS STEEL/<br>MATT BRUSHED 801.40.012<br>HAFELE | PCS. | 1.00 |
| | WARDROBE LIGHTING | HAFELE | LED 1090/513mm/833.03.061 | SET | 1.00 |
| | DRAWER RUNNER | SPECIFIC HARDWARE | MOVENTO WITH BLUMOTION<br>BLUM | SET | |
| | VANITY DRAWER RUNNER | | | | |
| | FIDDLE 520mm PSS FINISH | | | PCS. | 3.00 |
| | FIDDLE 220mm PSS FINISH | | | PCS. | 6.00 |
| | WARDROBE LIGHT SWITCH | LIGHTING | DOOR SENSOR SWITCH<br>833.89.041 HAFELE | PCS. | 2.00 |
| | A/C SWITCH | | | PCS. | 1.00 |
| | LIGHT SWITCH | | | PCS. | 2.00 |
| | POWER OUTLET | | | PCS. | 2.00 |
| | TOILET SWITCH | | | PCS. | 1.00 |

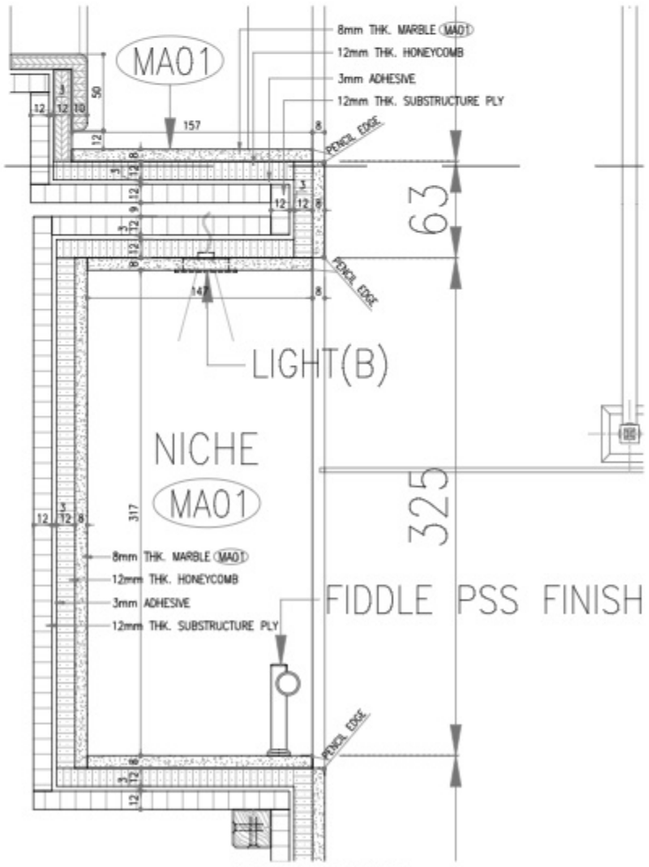


D2-SPOT DETAIL

SCALE: 1:2

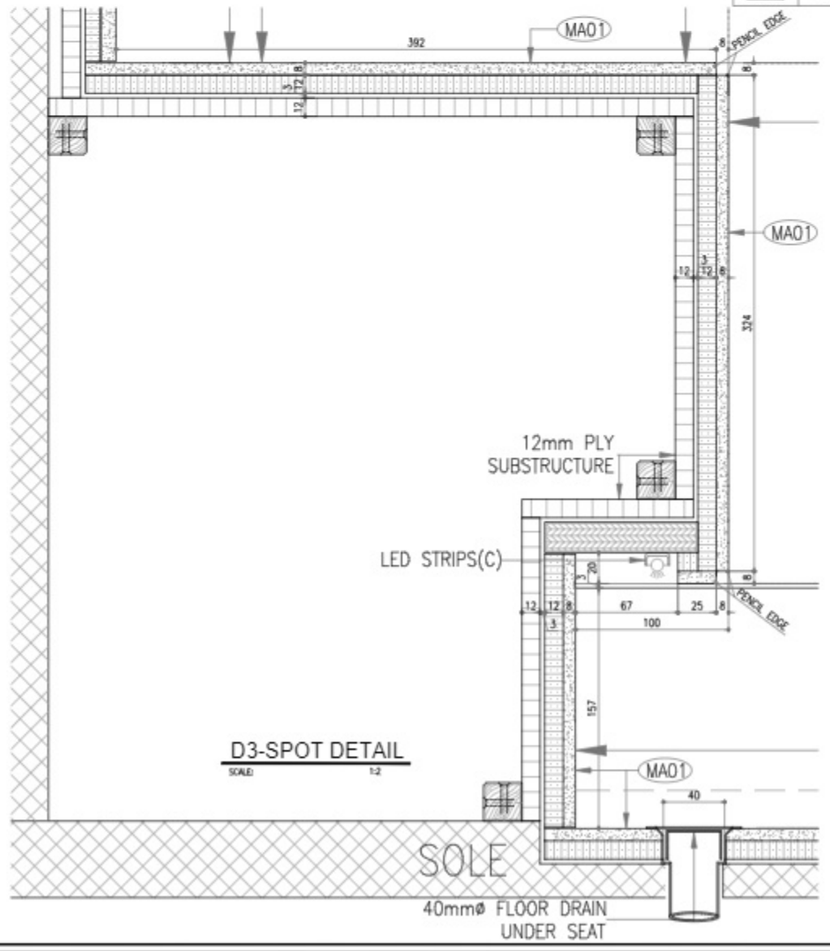


D3-SPOT DETAIL

SCALE: 1:2

LEGEND:
HATCH

- STRUCTURAL BULKHEAD
- INSULATION
- INTERIOR BULKHEAD
- SUBSTRUCTURE PLY
- SUBSTRUCTURE SOLID WOOD
- SOLID WOOD
- PLYWOOD
- MARBLE & HONEYCOMB

LEGEND:
SANITARY ACCESORIES

- 3 HOLE BASIN MIXER WITH POP UP WASTE, CHROME CRISTAL ET BRONZE CEB-25180-E-63-CL
- 1 HOLE BIDET MIXER WASTE, CHROME CRISTAL ET BRONZE CEB-25181-E-63
- COVER PLATE FOR THERMOSTATIC MIXER, ROUND, CHROME CRISTAL ET BRONZE CEB-27280-E-63
- WALL MOUNTED VALVE 3/4", CHROME CRISTAL ET BRONZE CEB-27261-E-63
- 3/4 " THERMOSTATIC MIXER 3-60 L/MN CRISTAL ET BRONZE CEB-27284
- WALL MOUNTED SHOWER SET WITH HOOK CHROME, CRISTAL ET BRONZE CEB-27151E-63
- DOUBLE ROBE HOOK, CHROME CRISTAL ET BRONZE CEB-07765-E
- SINGLE TOWEL RAIL 70cm, CHROME CRISTAL ET BRONZE CEB-07725-E
- GRAB BAR, 30cm, CHROME CRISTAL ET BRONZE CEB-07745-E
- WALL MOUNTED GLASS TUMBLER + HOLDER, CHROME CRISTAL ET BRONZE CEB-07770-E
- WALL MOUNTED LIQUID SOAP DISPENSER+HOLDER, CHROME CRISTAL ET BRONZE CEB-36281
- WALL MOUNTED WC PAPER HOLDER WITH COVER, CHROME CRISTAL ET BRONZE CEB-07715-E
- WALL MOUNTED WC BRUSH HOLDER, CHROME CRISTAL ET BRONZE CEB-36155-E
- HYGIENIC HAND SPRAY WITH STOP COCK CHROME, CRISTAL ET BRONZE CEB-27183-E-63
- SINGLE TOWEL RING, CHROME CRISTAL ET BRONZE CEB-07740-E
- TEOWA BIDET
- TEOWA TOILET
- UNDER COUNTER WASHBASIN ARCHITECTURA MODEL:417706 SIZE=540X340

Golf Craft Inc.

MAJESTY YACHTS

MAJESTY 155-01

102/103 DOUBLE GUEST CABIN & BATH ELEVATION 04

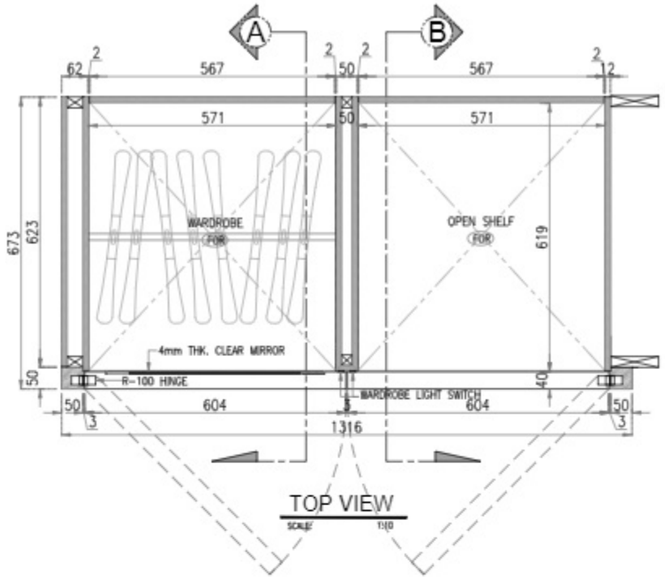


TOP VIEW

SCALE: 1:10

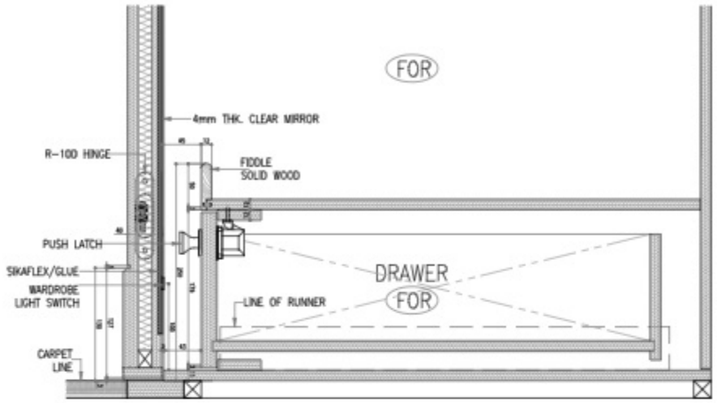


D1-SPOT DETAIL

SCALE: 1:5

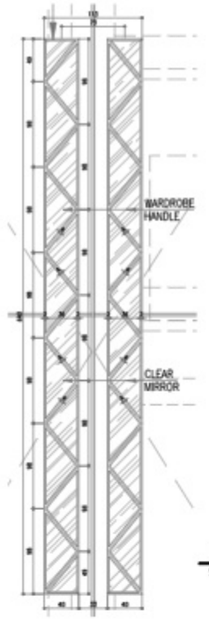


D2-SPOT DETAIL

SCALE: 1:5

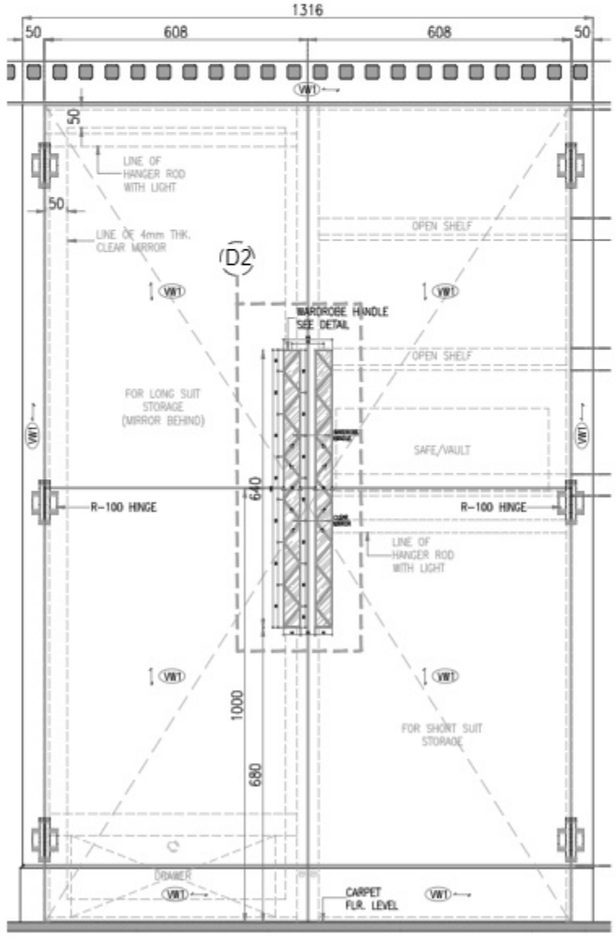


FRONT ELEVATION

SCALE: 1:10

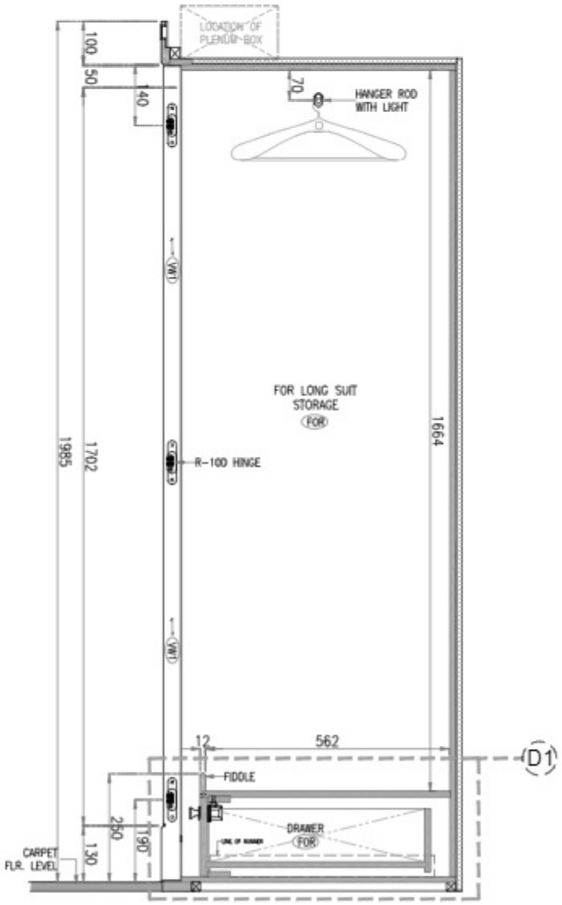


SECTION@A

SCALE: 1:10

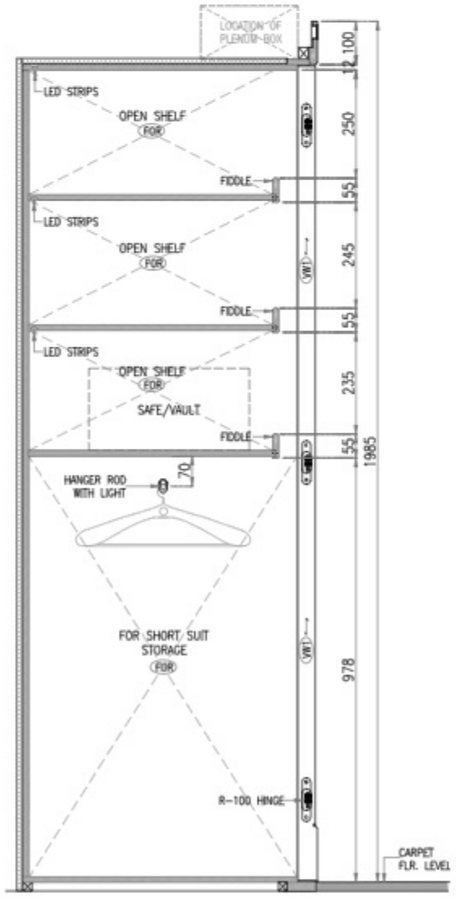


SECTION@B

SCALE: 1:10

Golf Craft Inc

MAJESTY YACHTS

MAJESTY 155-01

LD-DOUBLE GUEST
CABIN
WARDROBE MIRROR
DETAIL

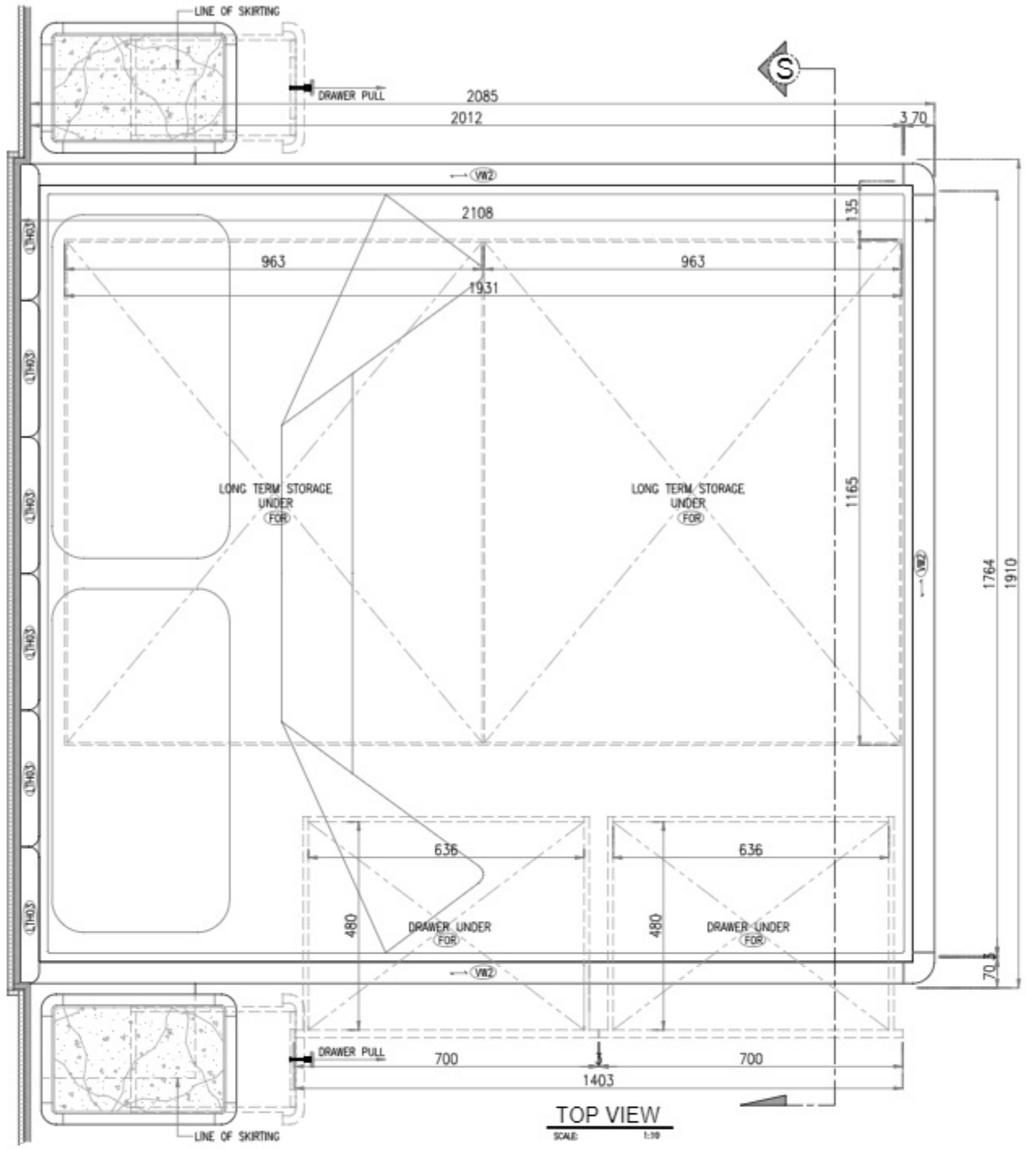


TOP VIEW

SCALE: 1:10

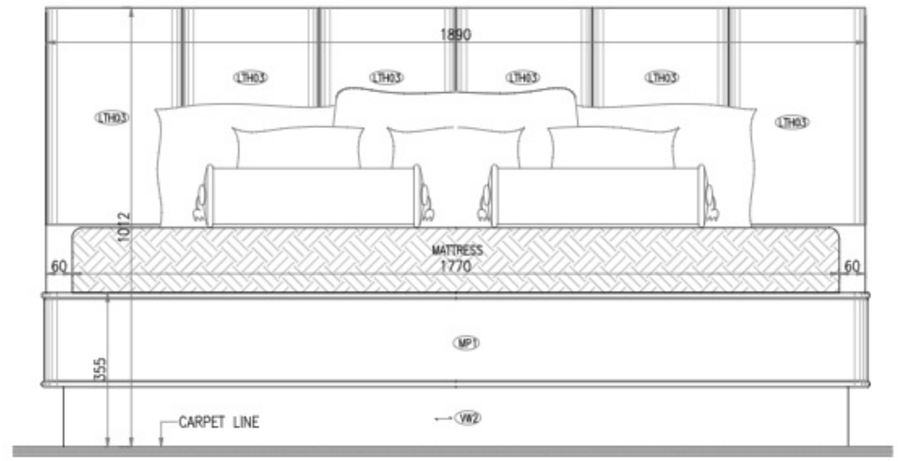


FRONT ELEVATION

SCALE: 1:10

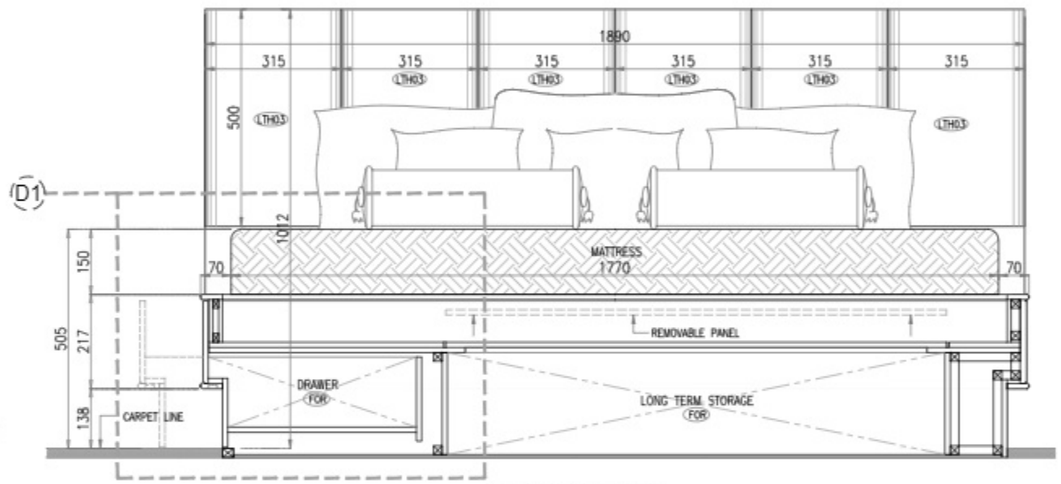


SECTION DETAIL

SCALE: 1:10

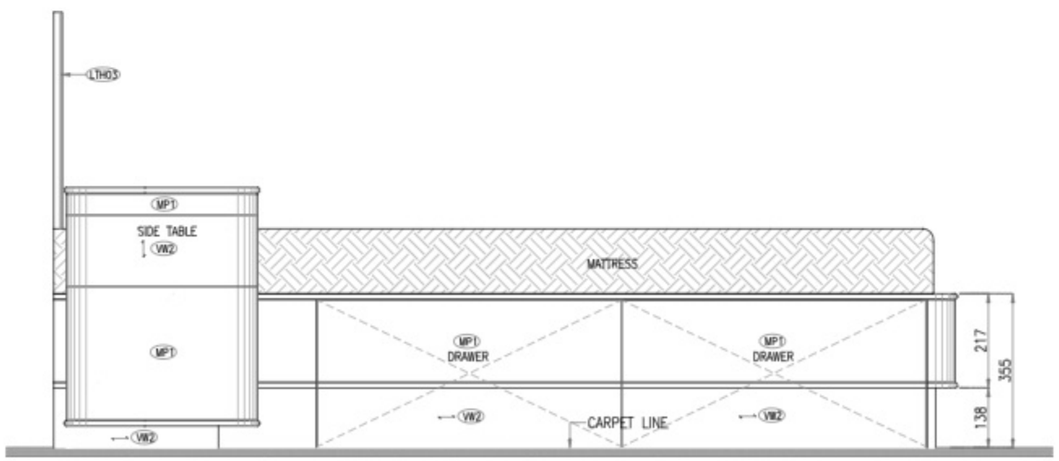


SIDE ELEVATION

SCALE: 1:10

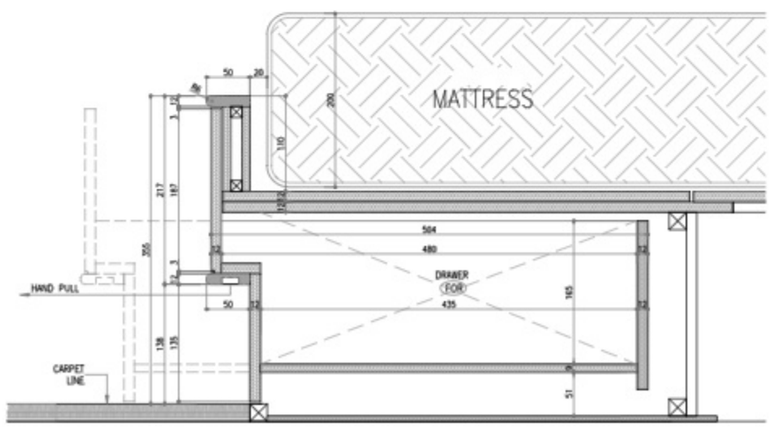


D1-SPOT DETAIL

SCALE: 1:5

Geoff Craft Inc

MAJESTY YACHTS

MAJESTY 155-01

LD-DOUBLE GUEST CABIN BED DETAIL

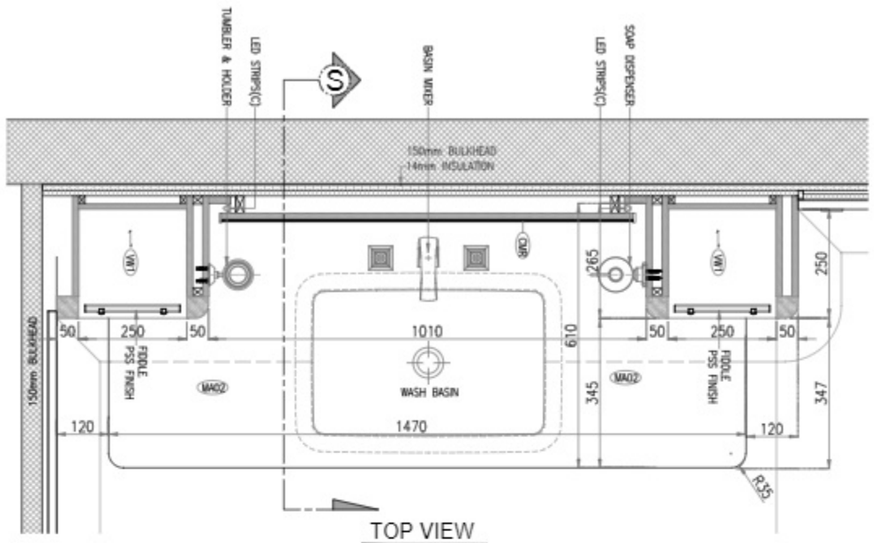


TOP VIEW

SCALE: 1:10

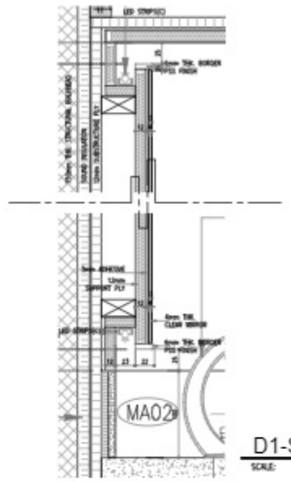


D1-SPOT DETAIL

SCALE: 1:5

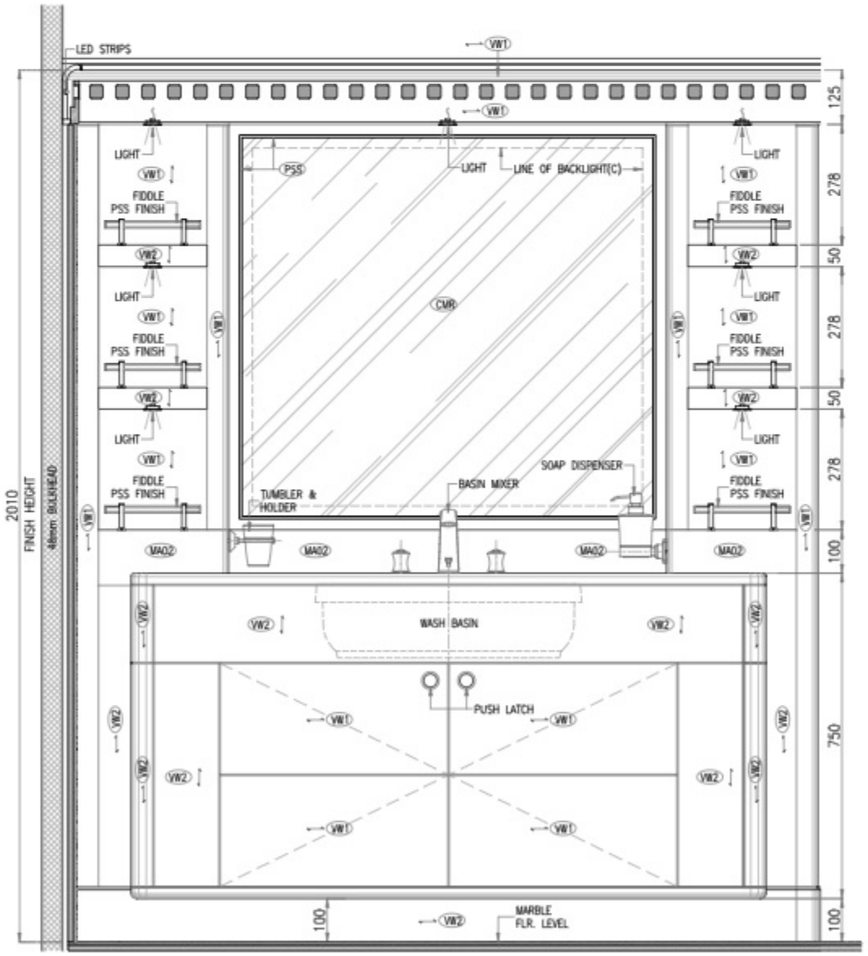


FRONT ELEVATION

SCALE: 1:10

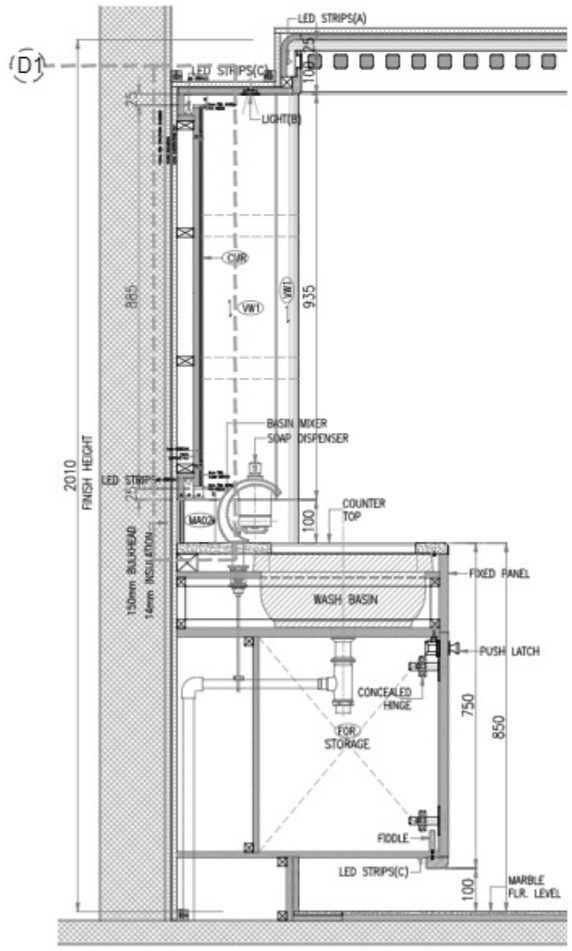


SECTION@A

SCALE: 1:10

Golf Craft Inc.

MAJESTY YACHTS

MAJESTY 155-01

LD-DOUBLE GUEST CABIN BATHROOM VANITY DETAIL

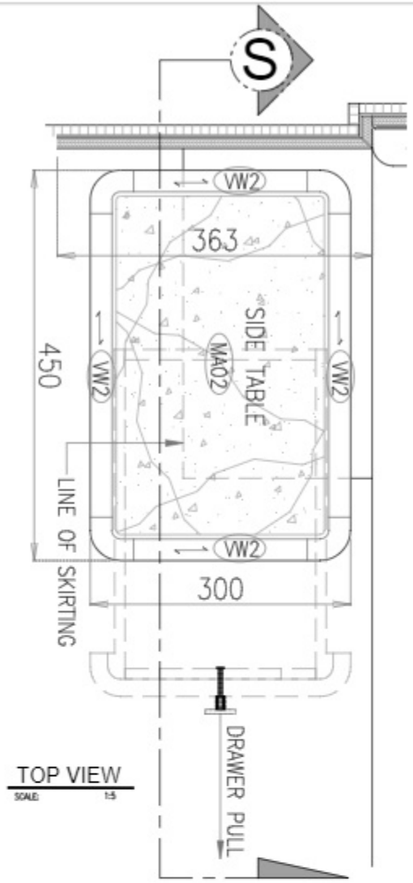


TOP VIEW
SCALE: 1:5

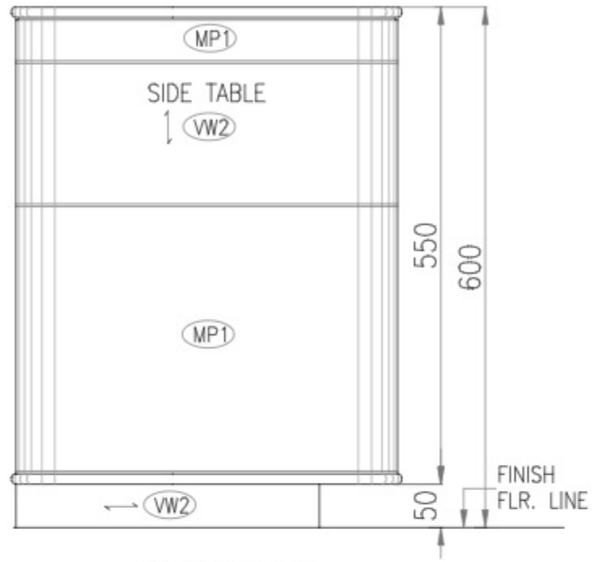


SIDE ELEVATION
SCALE: 1:5

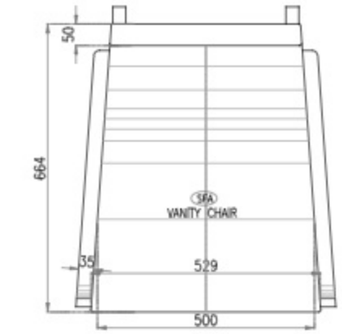


TOP VIEW
SCALE: 1:10

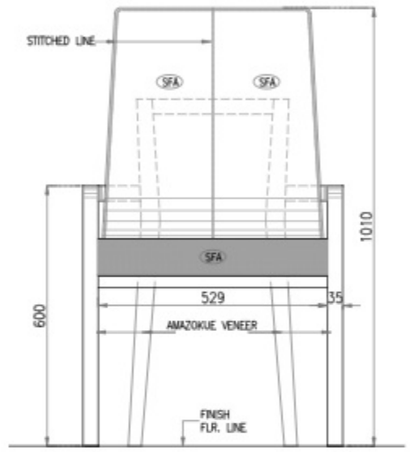


FRONT ELEVATION
SCALE: 1:10

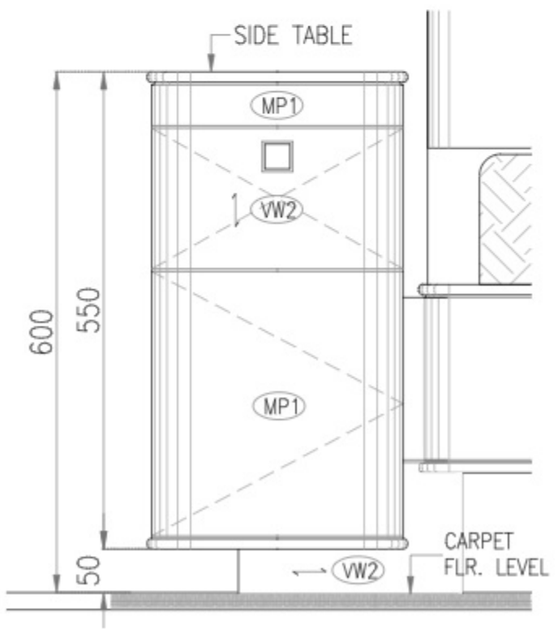


FRONT ELEVATION
SCALE: 1:5

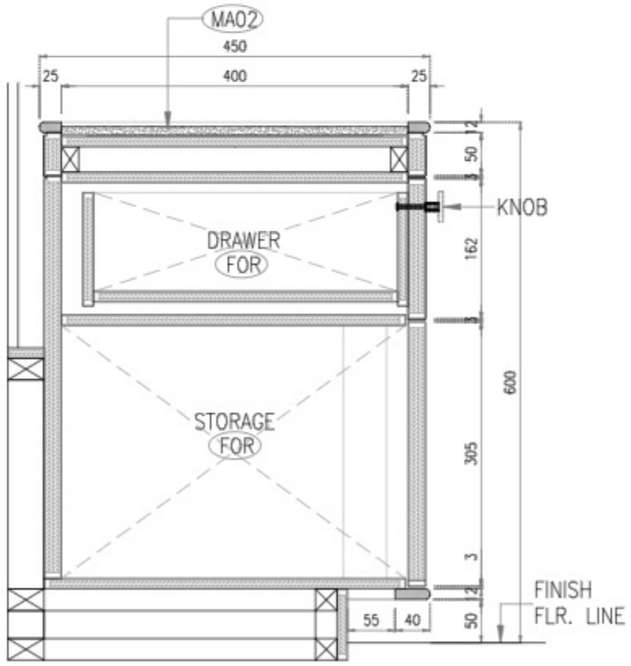


SECTION DETAIL
SCALE: 1:5

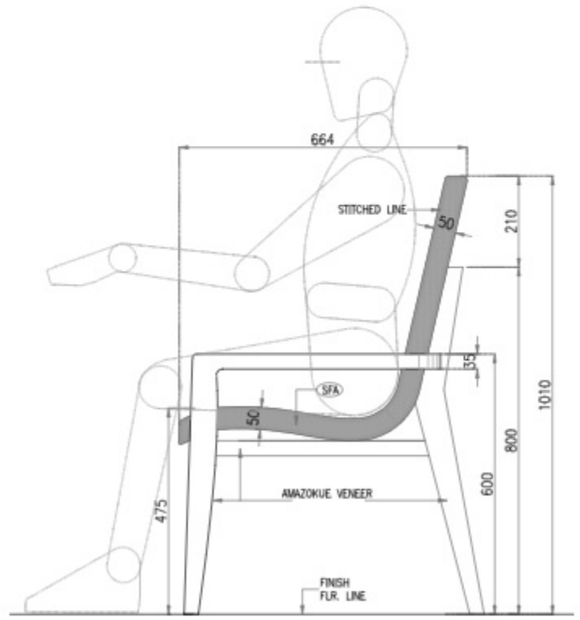


SIDE ELEVATION
SCALE: 1:10

Golf Craft Inc.

MAJESTY YACHTS

MAJESTY 155-01

LD-DOUBLE GUEST CABIN
SIDE TABLE & VANITY CHAIR DETAIL

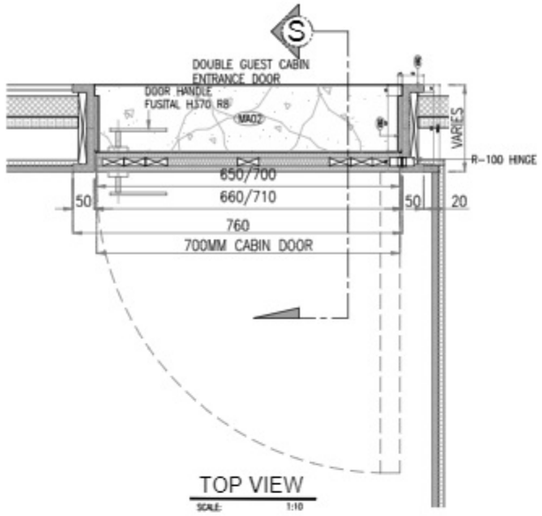


TOP VIEW
SCALE: 1:10

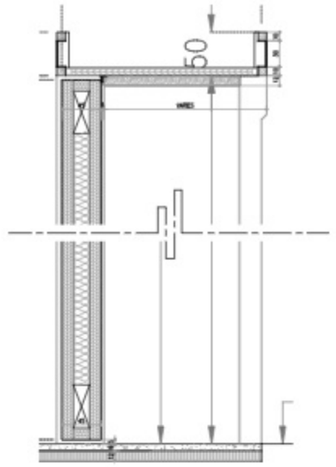


D1-SPOT DETAIL
SCALE: 1:5

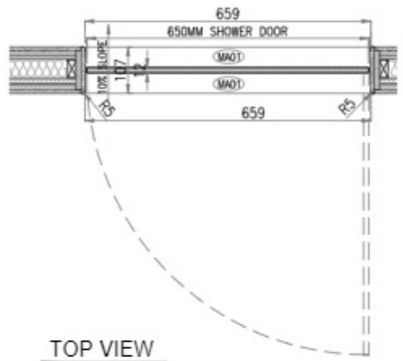


TOP VIEW
SCALE: 1:10

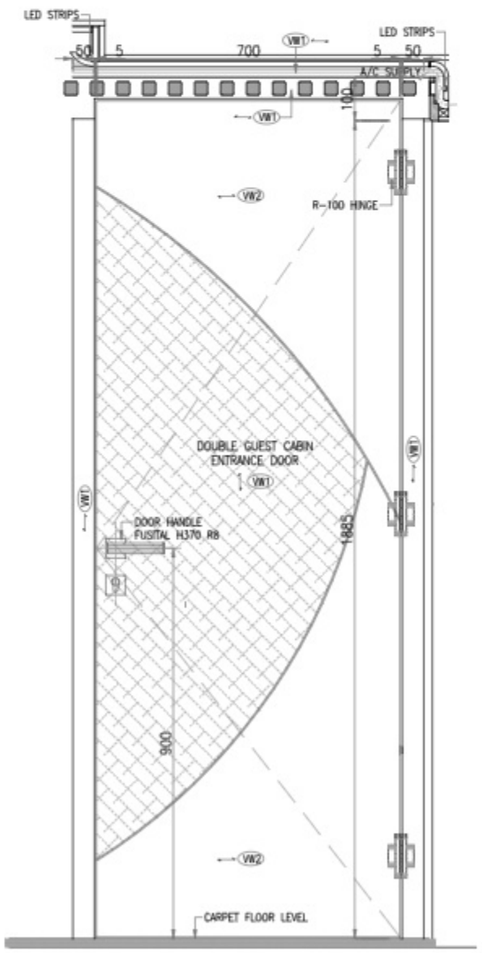


FRONT ELEVATION
SCALE: 1:10

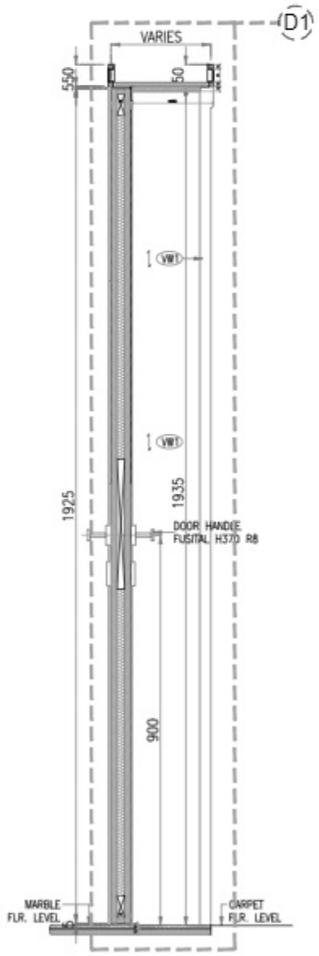


SIDE ELEVATION
SCALE: 1:10

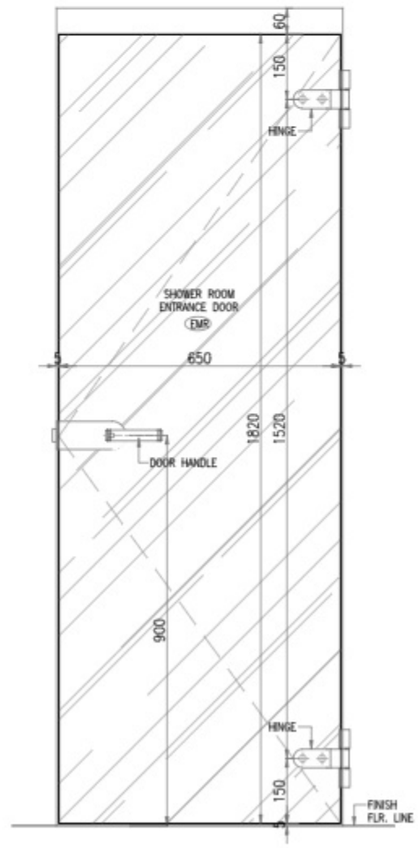


FRONT ELEVATION
SCALE: 1:10

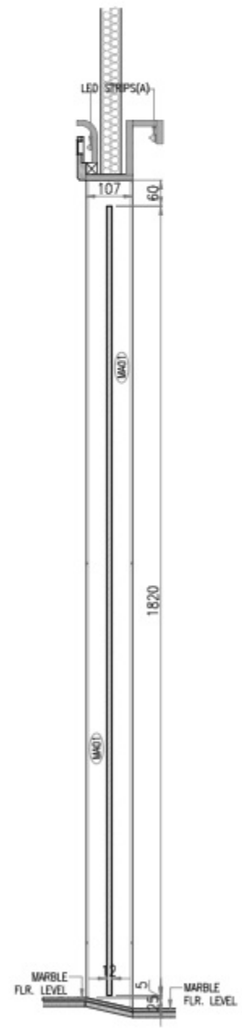


SIDE ELEVATION
SCALE: 1:10

Golf Craft Inc.

MAJESTY YACHTS
A Royal Shares Experience

MAJESTY 145-01

LD-DOUBLE GUEST CABIN DOOR DETAIL

# 002 - LIVING AREA - TV WALL - FIXED DETAILS

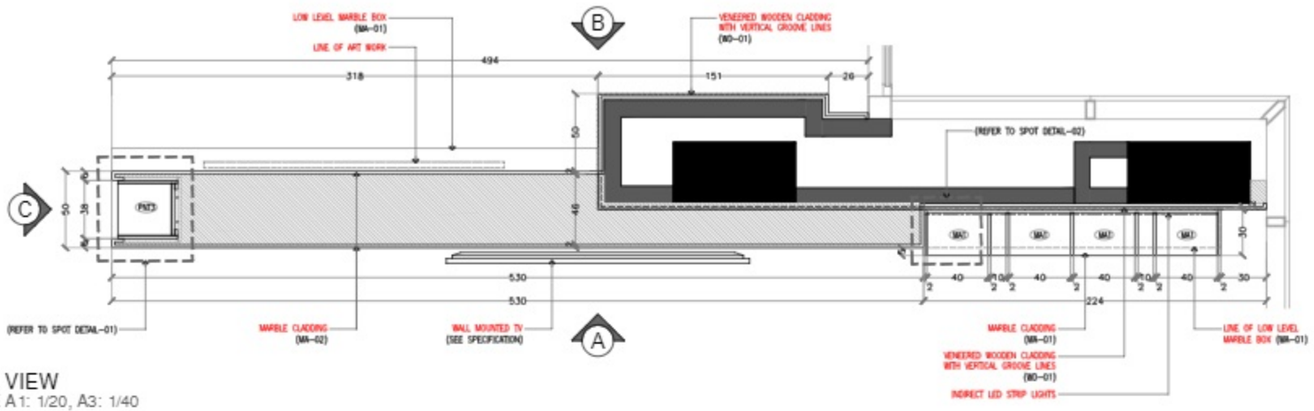


## PLAN VIEW
SCALE A1: 1/20, A3: 1/40

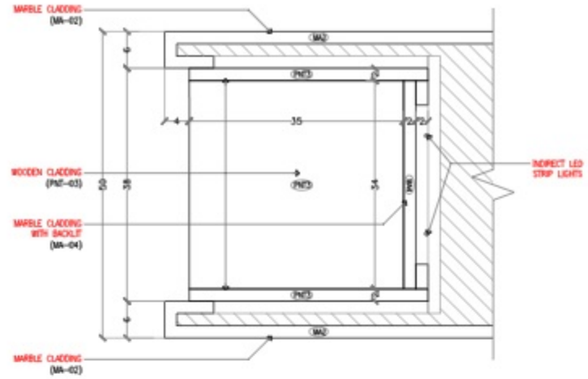


## SPOT DETAIL-01
SCALE A1: 1/5, A3: 1/10

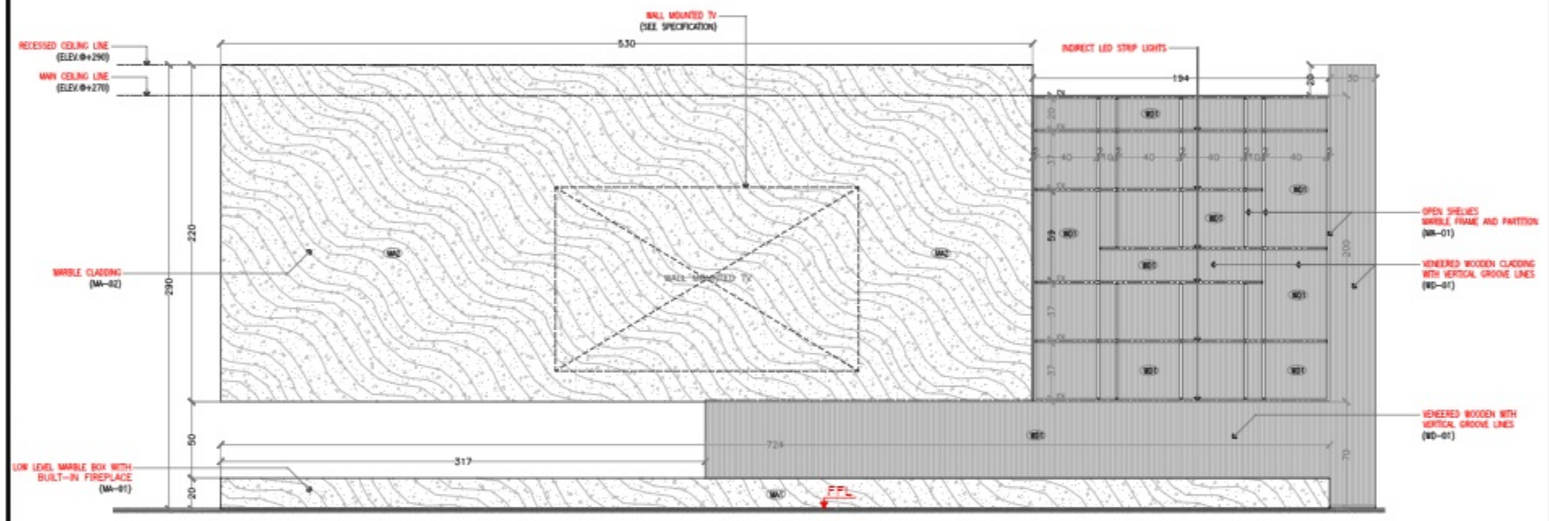


## ELEVATION @ A-A
SCALE A1: 1/20, A3: 1/40

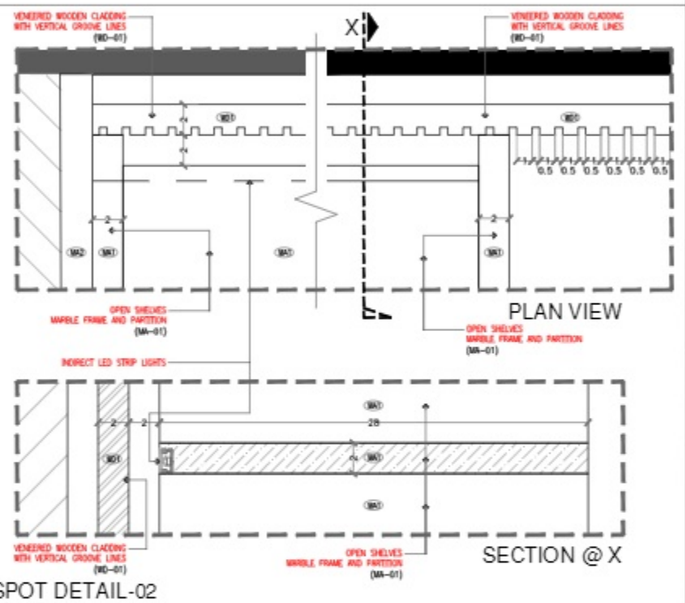


## SPOT DETAIL-02
SCALE A1: 1/2, A3: 1/4

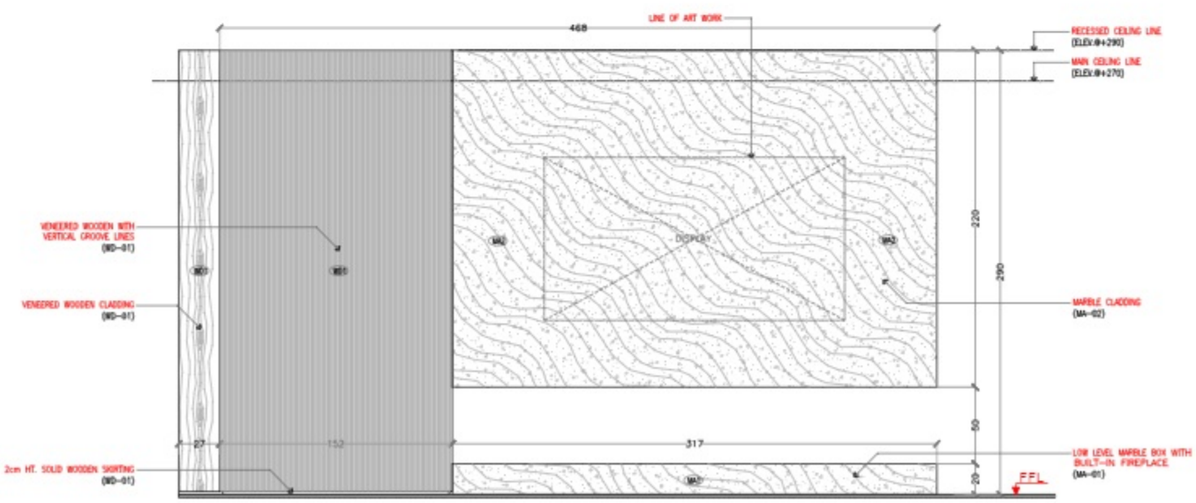


## ELEVATION @ B-B
SCALE A1: 1/20, A3: 1/40

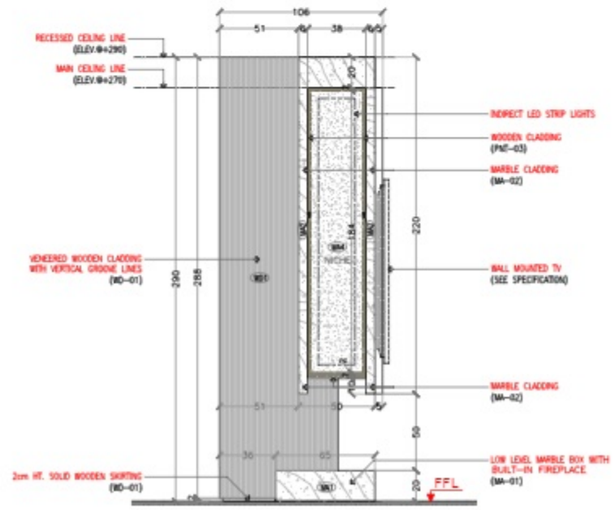


## ELEVATION @ C-C
SCALE A1: 1/20, A3: 1/40

MATERIALS LEGEND:

| CODE | DESCRIPTION |
|---|---|

PAINT:

| | | | |
|---|---|---|---|
| PNT-01 | WHITE PAINT | PNT-07 | HEALTHCARE |
| PNT-02 | BLACK PAINT | PNT-08 | CRUSSBERG |
| PNT-03 | BROWN PAINT | PNT-09 | CRUSSBERG |
| PNT-04 | BEIGE PAINT | PNT-10 | GREY |
| PNT-05 | DARK TEAL GREEN | PNT-11 | |
| PNT-06 | LIGHTBROWN | PNT-12 | |

WOOD VENEER:

| | | | |
|---|---|---|---|
| WD-01 | WALNUT DARK | WD-03 | DARK GREY |
| WD-02 | OAK LIGHT | WD-04 | |

MARBLE:

| | | | |
|---|---|---|---|
| MA-01 | BLACK FOREST | MA-04 | RED |
| MA-02 | BROWN | MA-05 | ORANGE |
| MA-03 | TUSCAN DARK GREY | MA-06 | |

PORCELAIN TILES:

| | |
|---|---|
| PT-01 | |
| PT-02 | |

CERAMIC TILES:

| | |
|---|---|
| CT-01 | |
| CT-02 | |

ENGINEERED STONE:

| | |
|---|---|
| ES-01 | |
| ES-02 | |

WALLPAPER:

| | | | |
|---|---|---|---|
| WP-01 | CINEBOLL | WP-03 | BLUE |
| WP-02 | CINEBOLL | WP-04 | |

FABRIC:

| | | | |
|---|---|---|---|
| FB-01 | | FB-03 | |
| FB-02 | | FB-04 | |

LEATHER:

| | | | |
|---|---|---|---|
| LT-01 | DARK | LT-03 | LIGHT |
| LT-02 | RED | LT-04 | ORANGE |

METAL:

| | |
|---|---|
| SS | STAINLESS STEEL BRUSHED FINISH |
| SS | STAINLESS STEEL MATT FINISH |
| MS | MILD STEEL FINISH |

GLASS/MIRROR:

| | | | |
|---|---|---|---|
| CGL | CLEAR GLASS | CMR | CLEAR MIRROR |
| TGL | TINTED GLASS BLACK | TMR | TINTED MIRROR BLACK |

CARPET:

| | |
|---|---|
| CP-01 | -- |
| CP-02 | -- |

PARQUET:

| | | | |
|---|---|---|---|
| PQ-01 | PARQUET FLOWS | PQ-03 | PARQUET |
| PQ-02 | PARQUET FLOWS | | |

GENERAL NOTES:

- PLANS & SECTIONS TO BE READ TOGETHER.
- EXAMINE THE DRAWINGS CAREFULLY BEFORE COMMENCING THE WORK.
- DO NOT SCALE FROM DRAWINGS.
- ALL DIMENSIONS ARE IN CENTIMETERS.
- DO NOT COMMENCE THE WORK UNLESS THE DRAWING IS ISSUED FOR CONSTRUCTION.
- ALL DIMENSIONS TO BE CHECKED AT SITE PRIOR TO SIMULATION.

REVISION STATUS

| REV. | DESCRIPTION | DATE |
|---|---|---|
| | | |
| | | |
| | | |

INTERIOR DESIGN:

CONSULTANT:

CLIENT:
---

JOB TITLE:
W RESIDENCES MANSION 8
(+500 sq.m.?)

DRAWING TITLE:
TV WALL DETAILS

| | |
|---|---|
| LEVEL: LIVING AREA | FLOOR: PENTHOUSE |
| DWG. VALID FOR: REFERENCE | JOB NO.: |
| DRAWN BY: PAU | CHECKED BY: |
| SCALE: A1: 1 / 25, A3: 1 / 50 | DATE: |
| DWG. NO.: SEC | REV.: / SHEET NO.: |

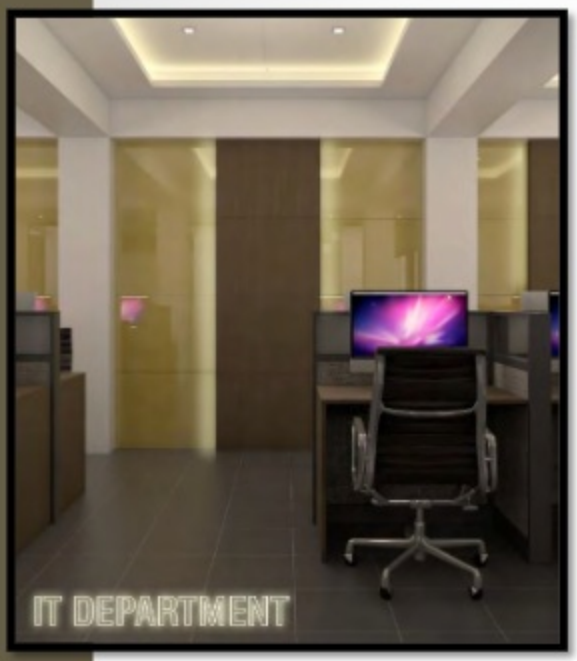
IT DEPARTMENT

RECEPTION AREA

OFFICE DESK

NATCCO
NETWORK
01
HALLWAY

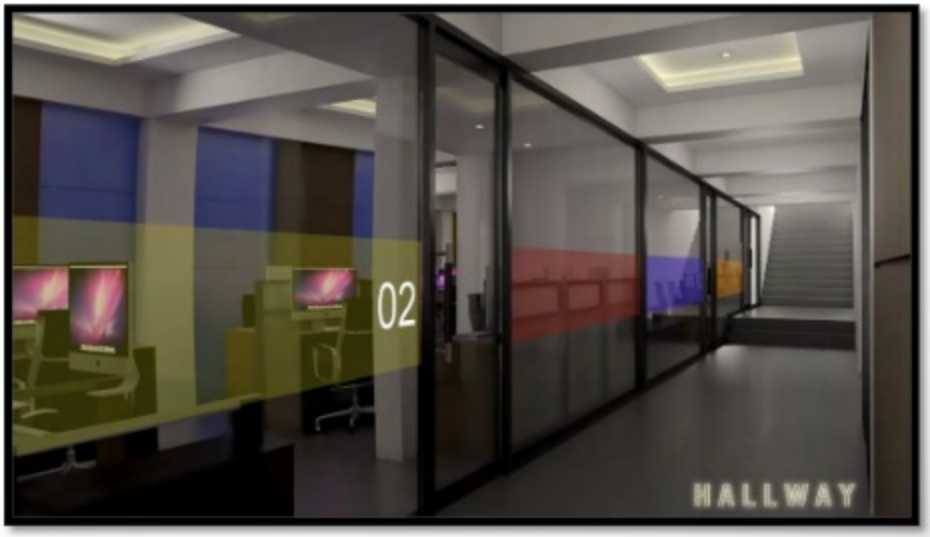
02
HALLWAY

KC | PAULINO
DESIGN & RENDER

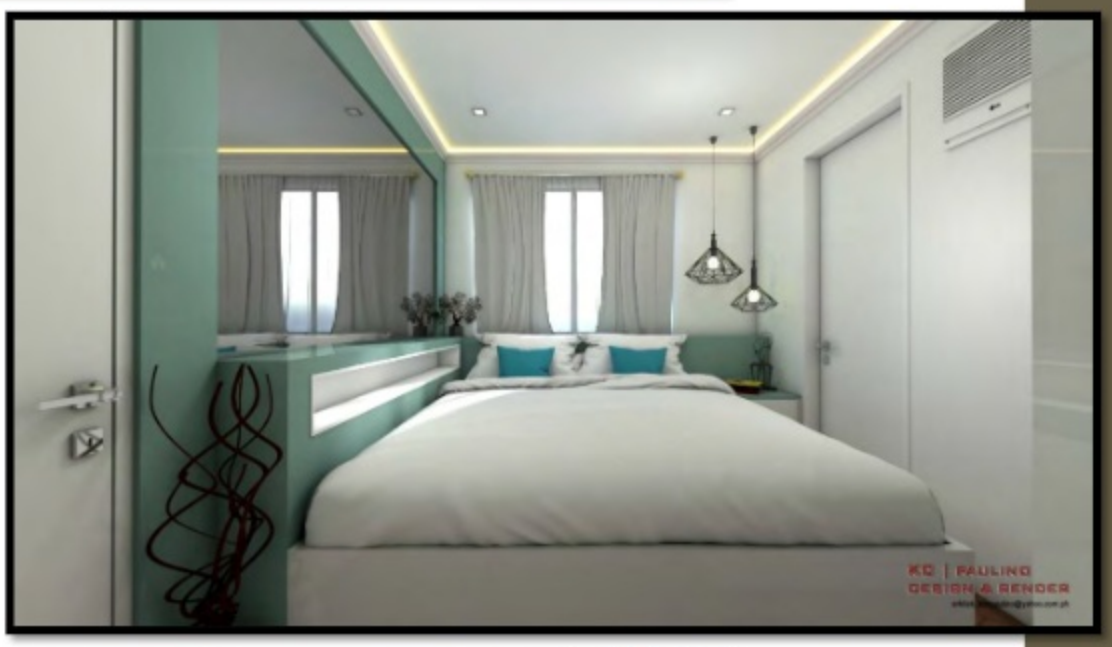
KC | PAULINO
DESIGN & RENDER

KC | PAULINO
DESIGN & RENDER

• Website Link: https://arkitekkcepaulino.wixsite.com/kcep